KF050R169J0100

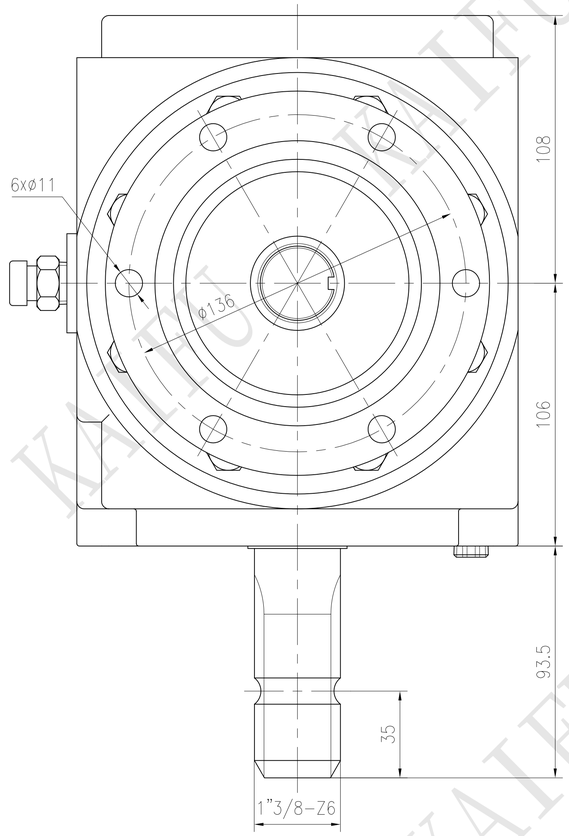

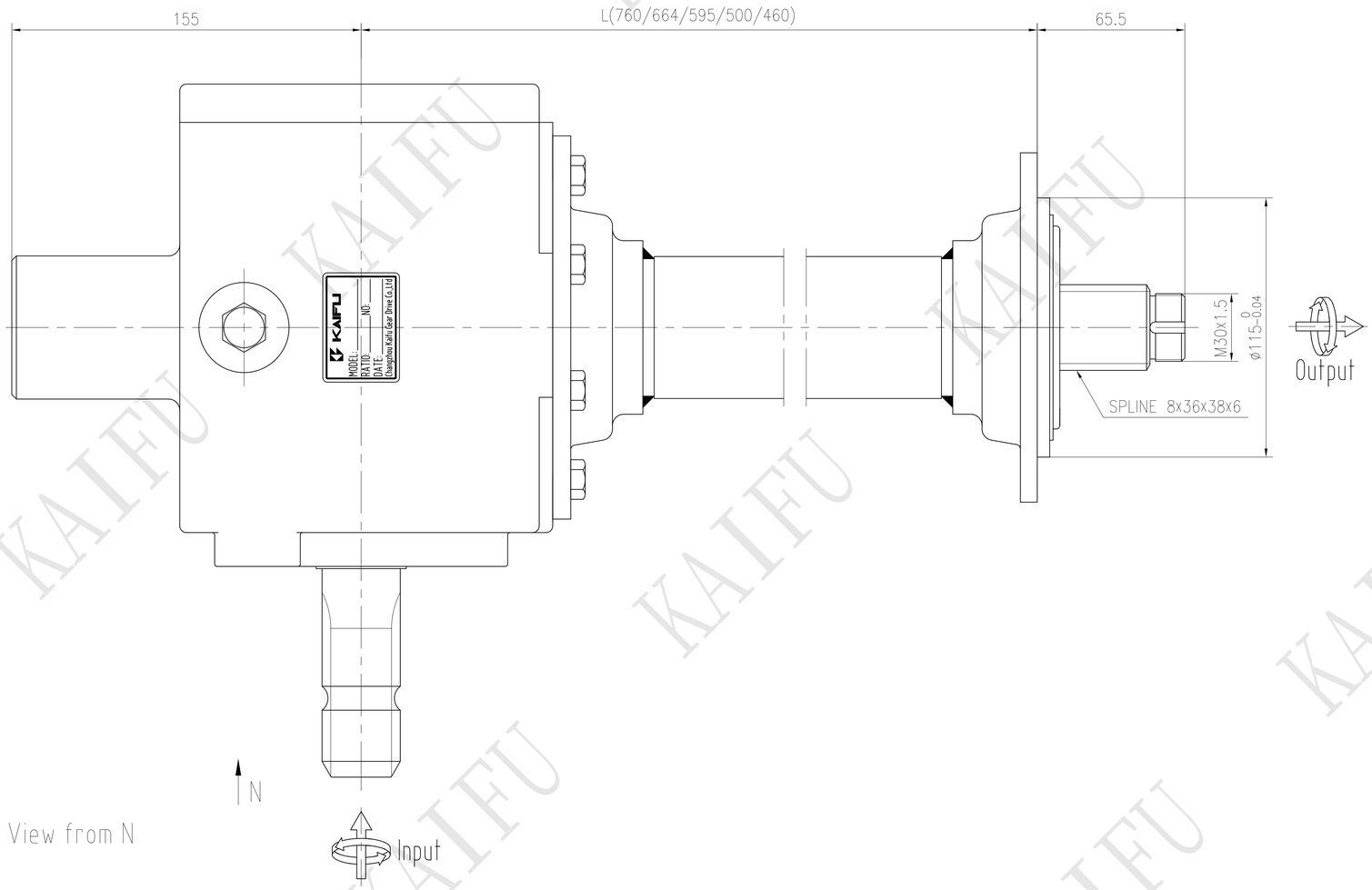

View from N

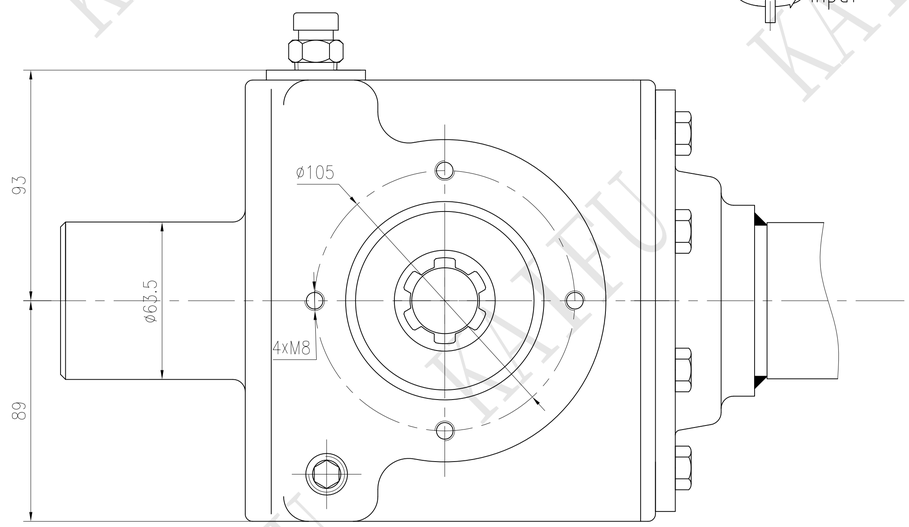

Drawing no.	Size L
KF050R169J0500	760
KF050R169J0400	664
KF050R169J0300	595
KF050R169J0200	500
KF050R169J0100	460

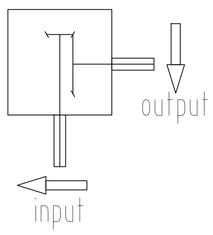

Input power		Input speed	Output torque	Ratio	Weight	Gear parameter		
HP	KW	r.p.m	Nm	i	kg	Z1	Z2	M
50	37.3	540	1116	1.69 : 1	43	13	22	5.7

KF050R169J0100 | KF50

Changzhou KAIFU Power Transmission Co.Ltd
Add: wujin district, changzhou city, jiangsu province, P.R. of China.
Email: daisy.chen@kaifuindustries.com

KAIFU