KF025R290Z0100

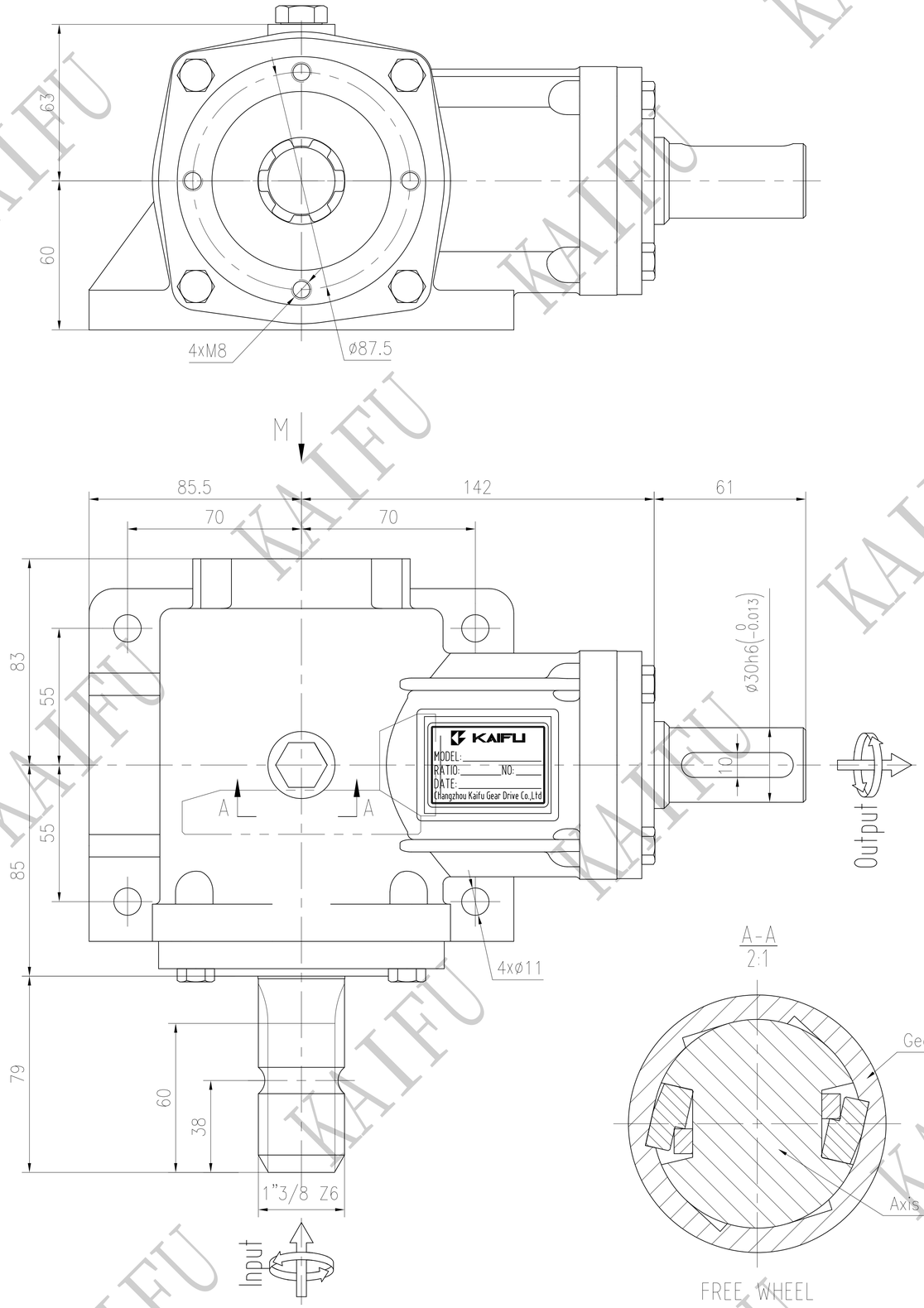

View from M

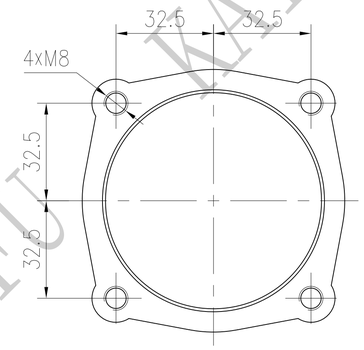

A-A
2:1

FREE WHEEL

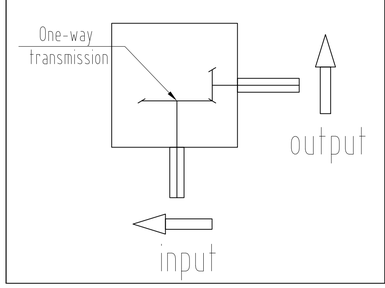

Input power		Input speed	Output torque	Ratio	Weight	Gear parameter		
HP	KW	r.p.m	Nm	i	kg	Z1	Z2	M
25	18.3	540	112	1 : 2.9	14.5	32	11	3.0

KF025R290Z0100 | KF25

Changzhou KAIFU Power Transmission Co.Ltd
Add: wujin district, changzhou city, jiangsu province, P.R. of China.
Email: daisy.chen@kaifuindustries.com

KAIFU